इंटरनेट मानक

Disclosure to Promote the Right To Information

Whereas the Parliament of India has set out to provide a practical regime of right to information for citizens to secure access to information under the control of public authorities, in order to promote transparency and accountability in the working of every public authority, and whereas the attached publication of the Bureau of Indian Standards is of particular interest to the public, particularly disadvantaged communities and those engaged in the pursuit of education and knowledge, the attached public safety standard is made available to promote the timely dissemination of this information in an accurate manner to the public.

"जानने का अधिकार, जीने का अधिकार"
Mazdoor Kisan Shakti Sangathan
"The Right to Information, The Right to Live"

"पुराने को छोड नये के तरफ"
Jawaharlal Nehru
"Step Out From the Old to the New"

IS 6743 (1972): Sizes and mounting dimensions of aircraft instrument cases (rear mounting type) [TED 14: Aircraft and Space Vehicles]

"ज्ञान से एक नये भारत का निर्माण"
Satyanarayan Gangaram Pitroda
"Invent a New India Using Knowledge"

Act Number 22 of 2005
The Indian Parliament
RIGHT TO INFORMATION

Made Available By
Public.Resource.Org

"ज्ञान एक ऐसा खजाना है जो कभी चुराया नहीं जा सकता है"
Bhartṛhari—Nītiśatakam
"Knowledge is such a treasure which cannot be stolen"

BLANK PAGE

BRUTUM FULMEN

IGNORANTIA JURIS NON EXCUSAT

PROTECTED BY COPYRIGHT

UDC 629·13·05-758·1 : 389·63

(First Reprint DECEMBER 1986)

(Reaffirmed 2005)

Indian Standard

SIZES AND MOUNTING DIMENSIONS OF AIRCRAFT INSTRUMENT CASES (REAR-MOUNTING TYPE)

1. Scope — Dimensions of the screw mounted aircraft instrument cases (rear-mounting type), and mounting dimensions on instrument panel.

2. Dimensions for Instrument Cases (Rear-Mounting Type)

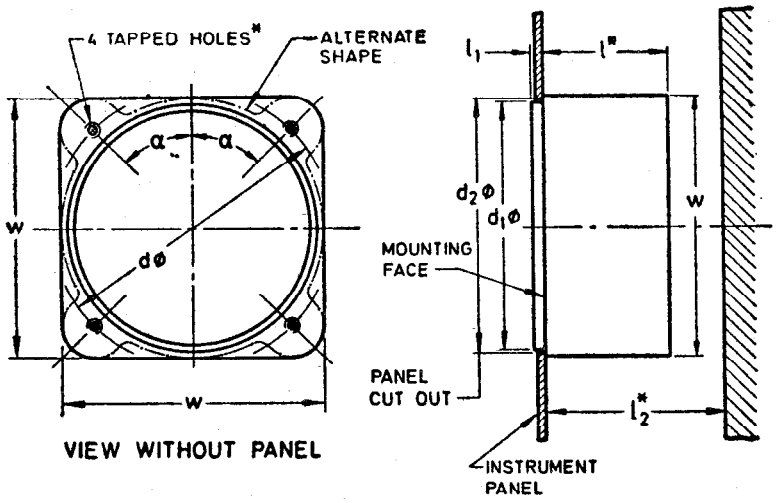

*The dimensions l and l_2 and the tapped holes shall be as specified in the particular standard for each instrument.

All dimensions in millimetres.

Nominal Size	d	d_1	l_1	W Max	α
39	47·1 ± 0·125	$38·7^{0}_{-0·39}$	$3^{0}_{-0·5}$	41·5	45° ± 15′
57	66·7 ± 0·15	$57·2^{0}_{-0·46}$	$3^{0}_{-0·5}$	61	45° ± 11′
80	89·0 ± 0·175	$79·4^{0}_{-0·46}$	$3^{0}_{-0·5}$	83	45° ± 8′

This standard conforms to ISO/R 103-1959.

Adopted 14 September 1972 © April 1973, ISI

INDIAN STANDARDS INSTITUTION
MANAK BHAVAN, 9 BAHADUR SHAH ZAFAR MARG
NEW DELHI 110002

Aircraft and Space Vehicles Sectional Committee, EDC 74 [Ref : Doc : EDC 74 (1975)]

3. Mounting Dimensions on Instrument Panel

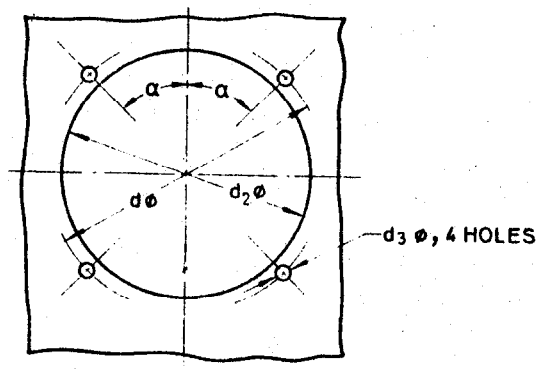

All dimensions in millimetres.

Nominal Size	d	d_2	d_3	α
39	47·1 ± 0·125	$39{\cdot}0 + {}^{0{\cdot}25}_{0}$	3·5 ± 0·2	45° ± 15′
57	66·7 ± 0·15	$57{\cdot}5 + {}^{0{\cdot}30}_{0}$	4·5 ± 0·2	45° ± 11′
80	89·0 ± 0·175	$80{\cdot}0 + {}^{0{\cdot}35}_{0}$	4·5 + 0·2	45° ± 8′

Reproduced by Reprography Unit, ISI, New Delhi